EXPLODED PARTS VIEW
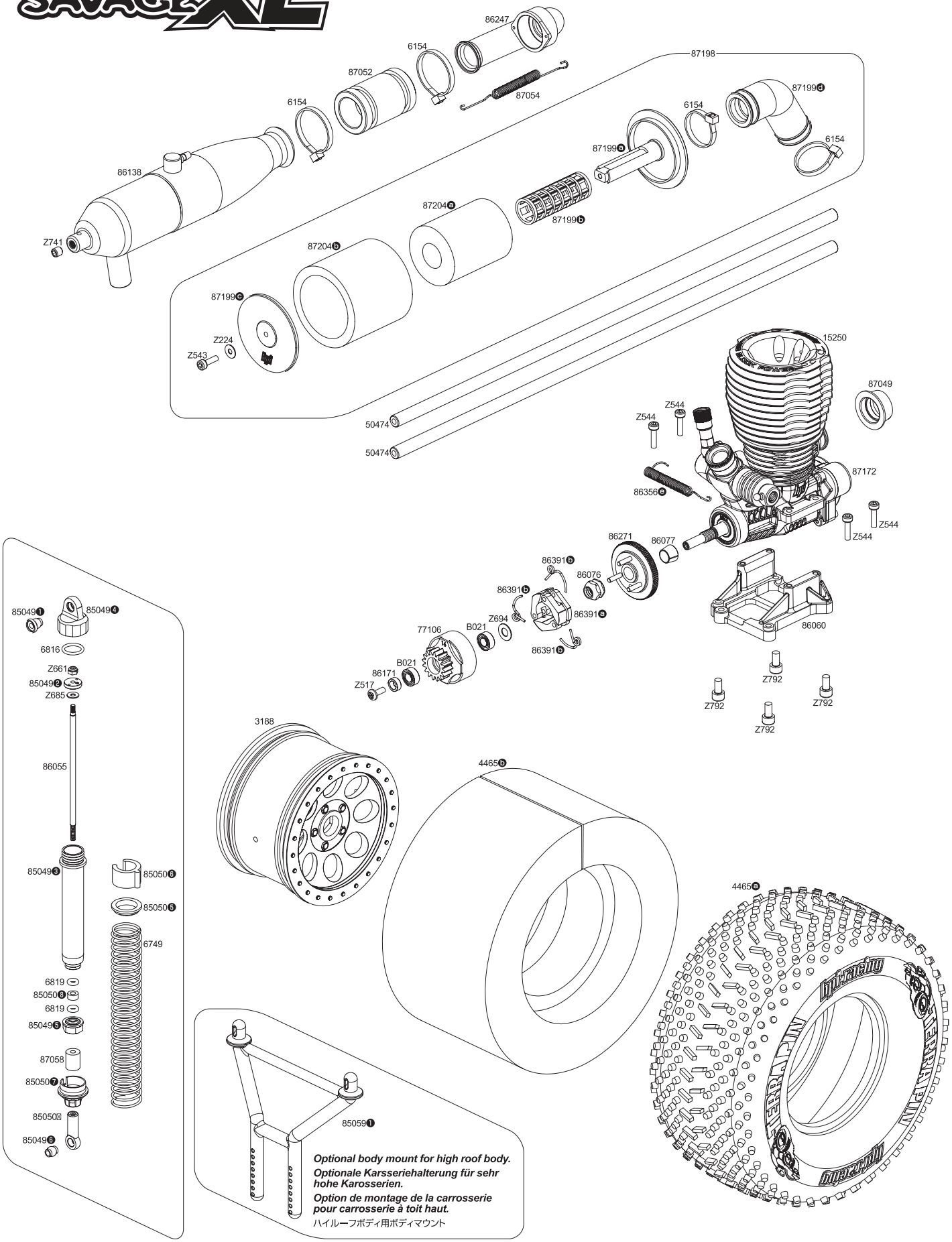
SAVAGE XL