EXPLODED PARTS VIEW
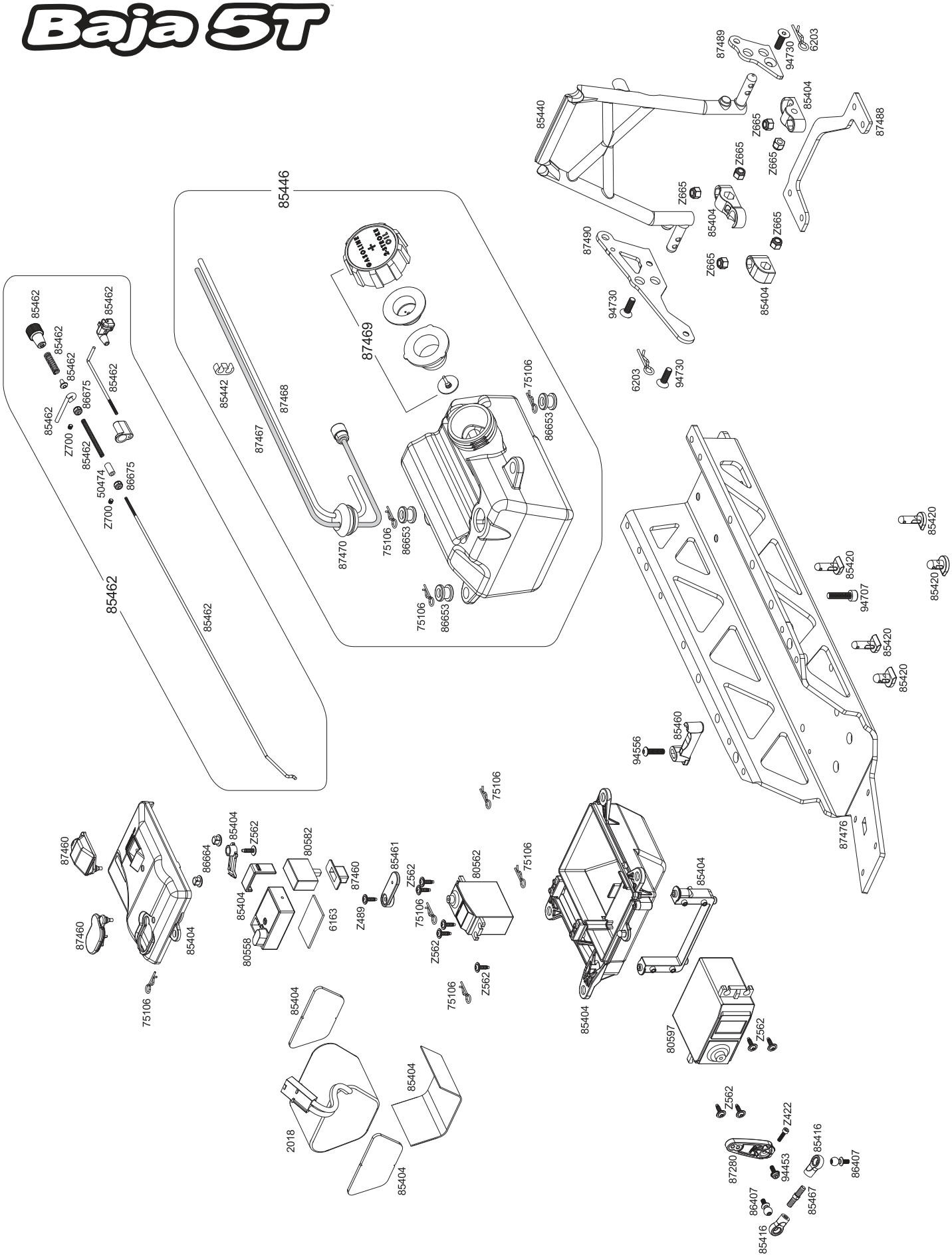
Baja 5T