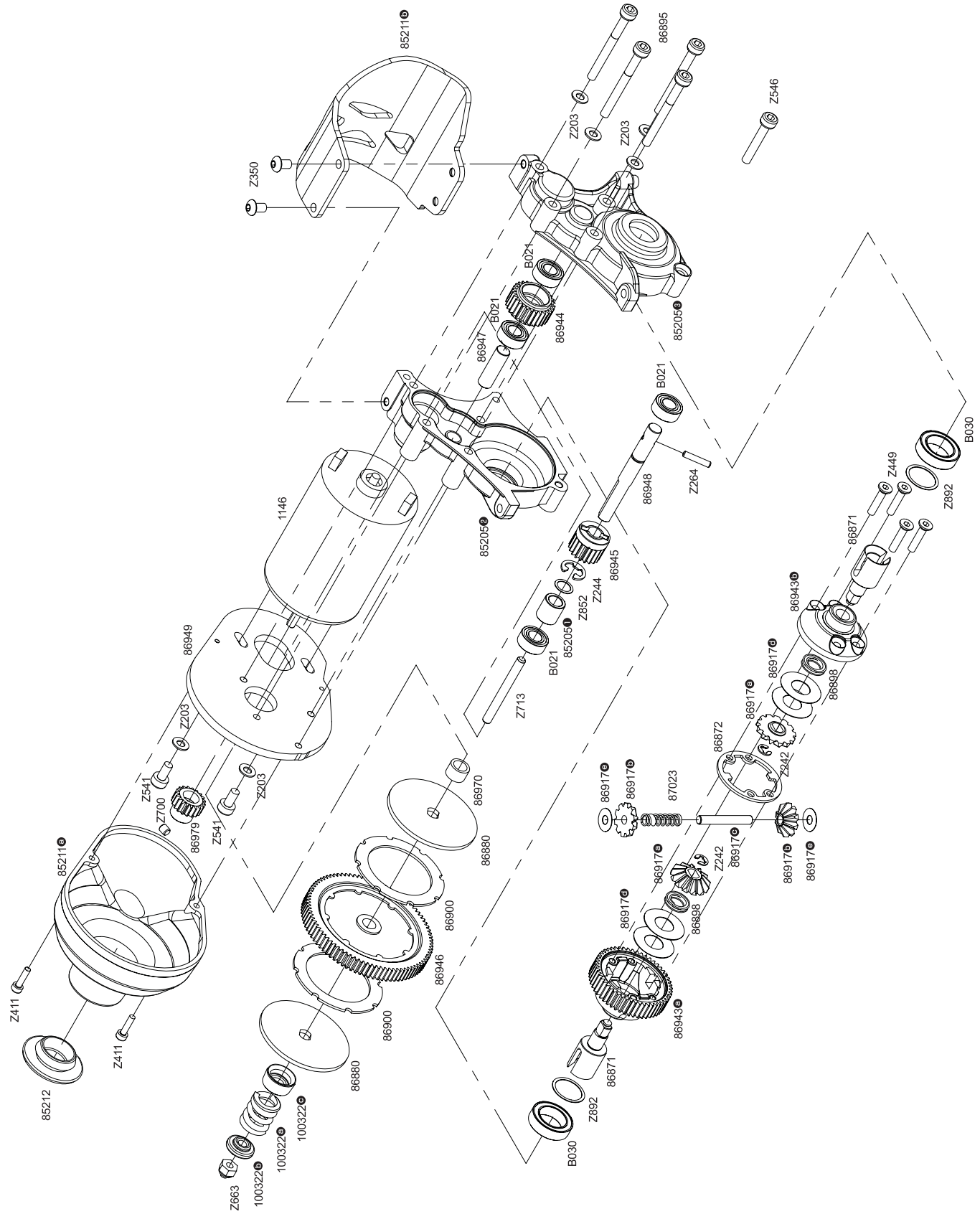E FIRESTORM 10T