EXPLODED PARTS VIEW
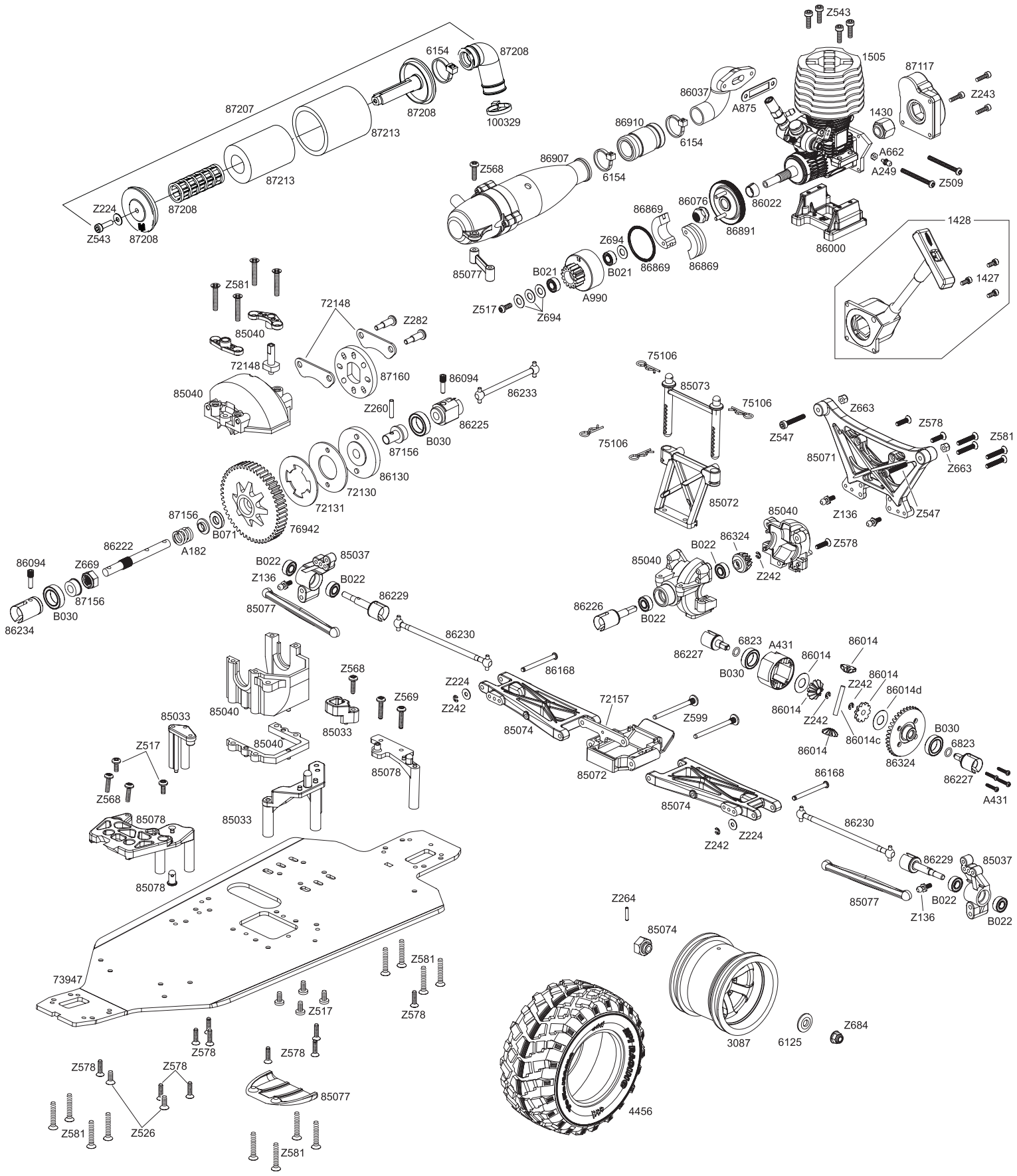
nitro MT 2 G3.0