EXPLODED PARTS VIEW
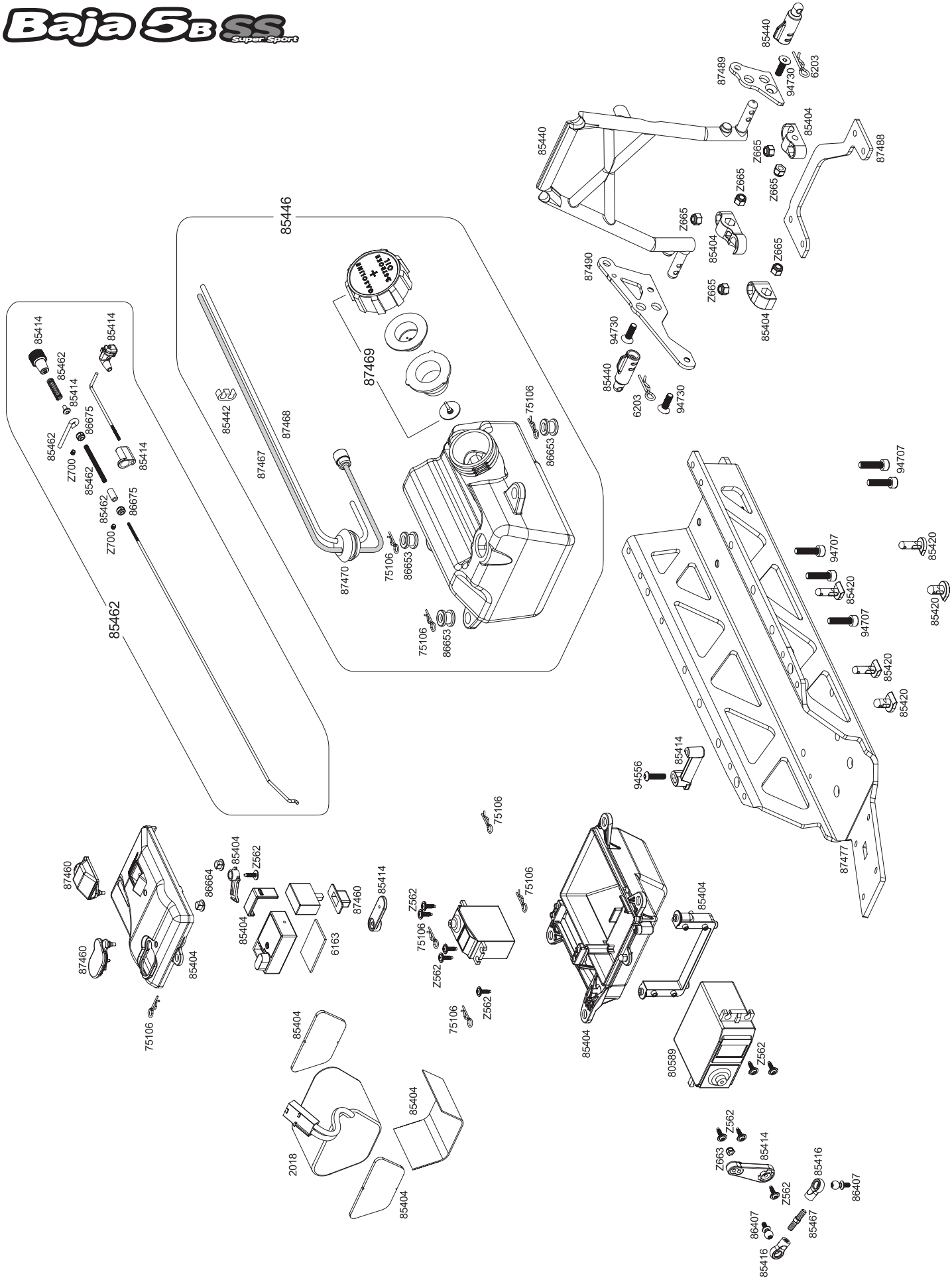
Baja 5B SS Super Sport