EXPLODED PARTS VIEW

SAVAGE X SS
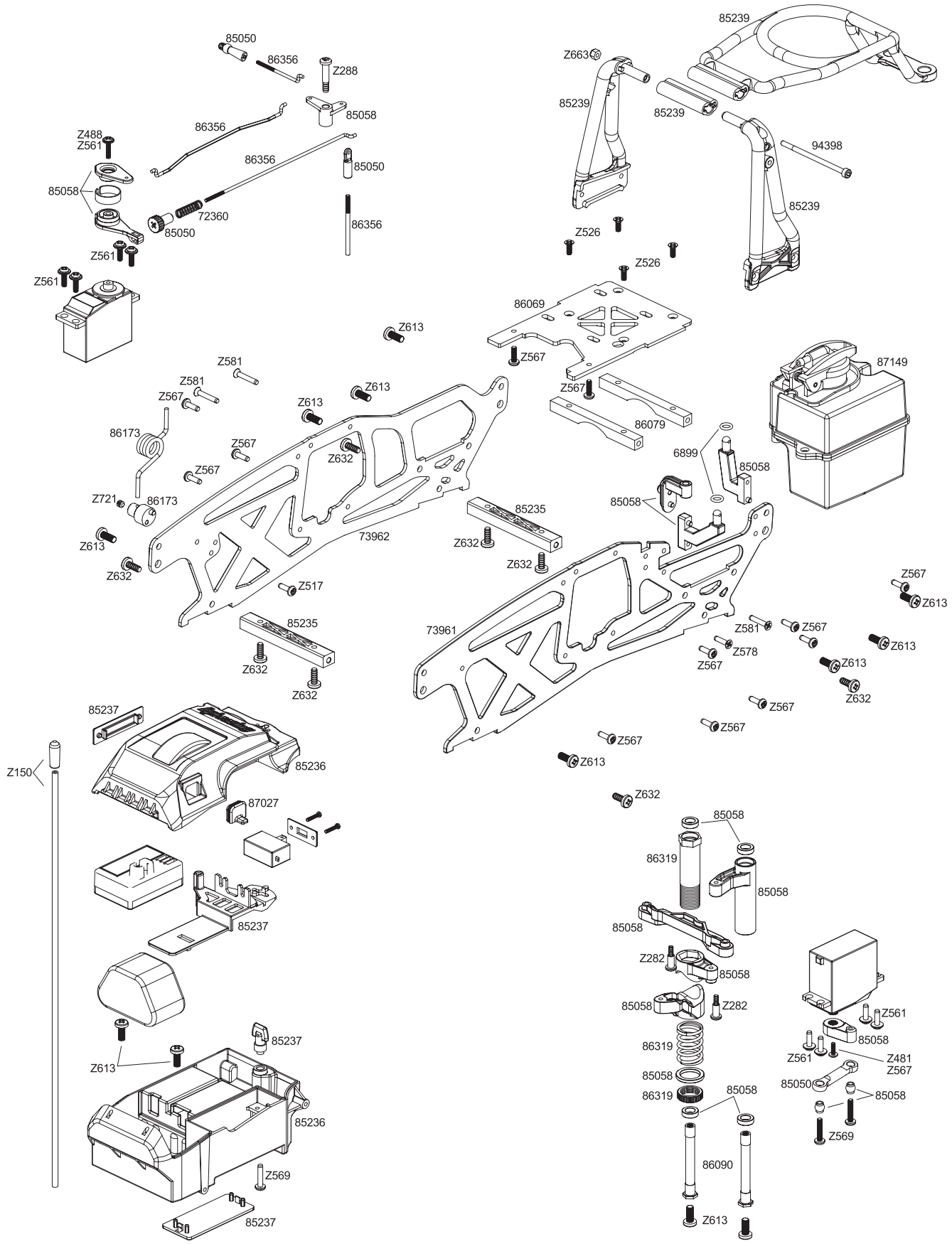
4.6 BIG BLOCK 4WD MONSTER TRUCK