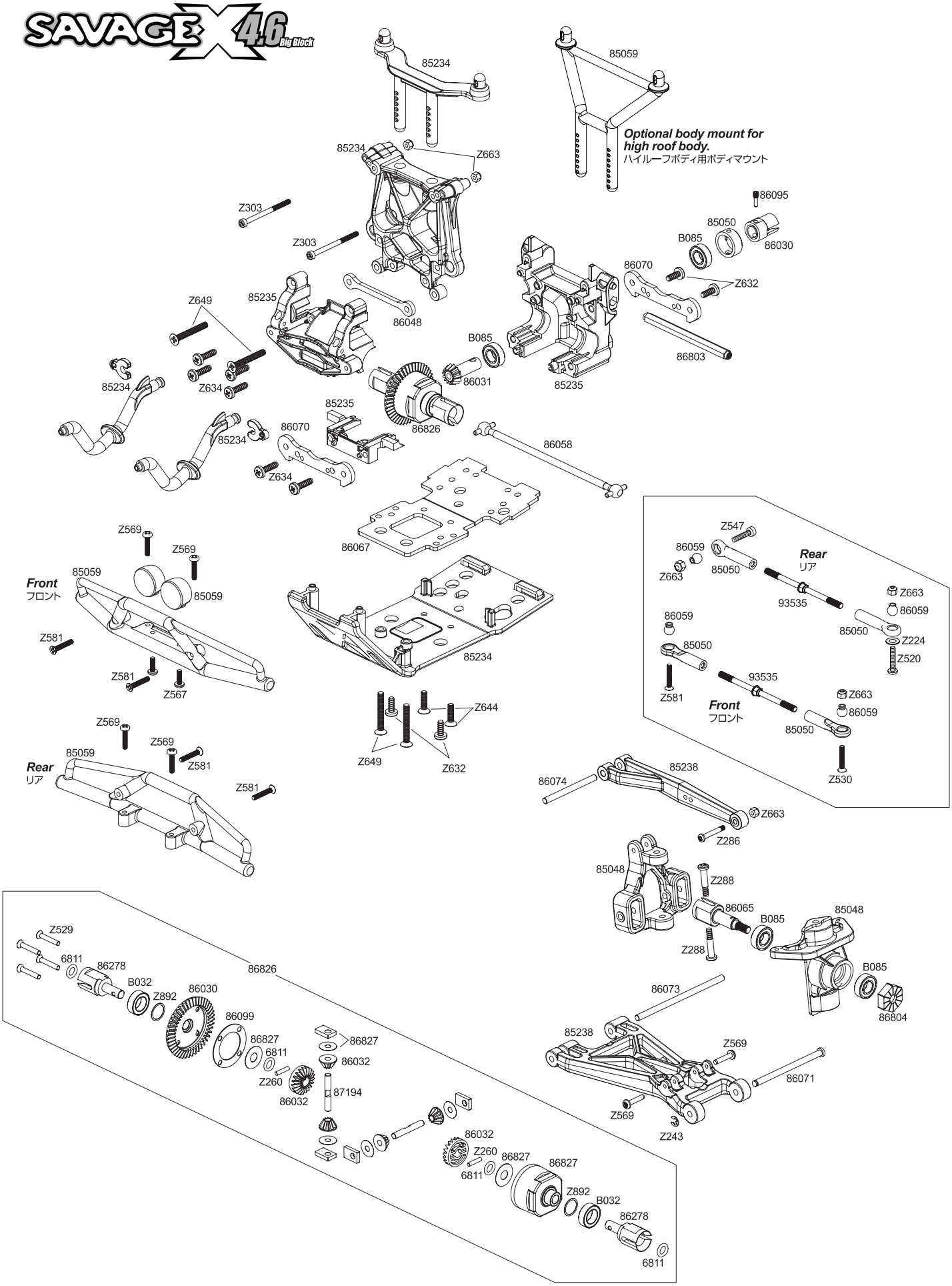EXPLODED PARTS VIEW