EXPLODED PARTS VIEW
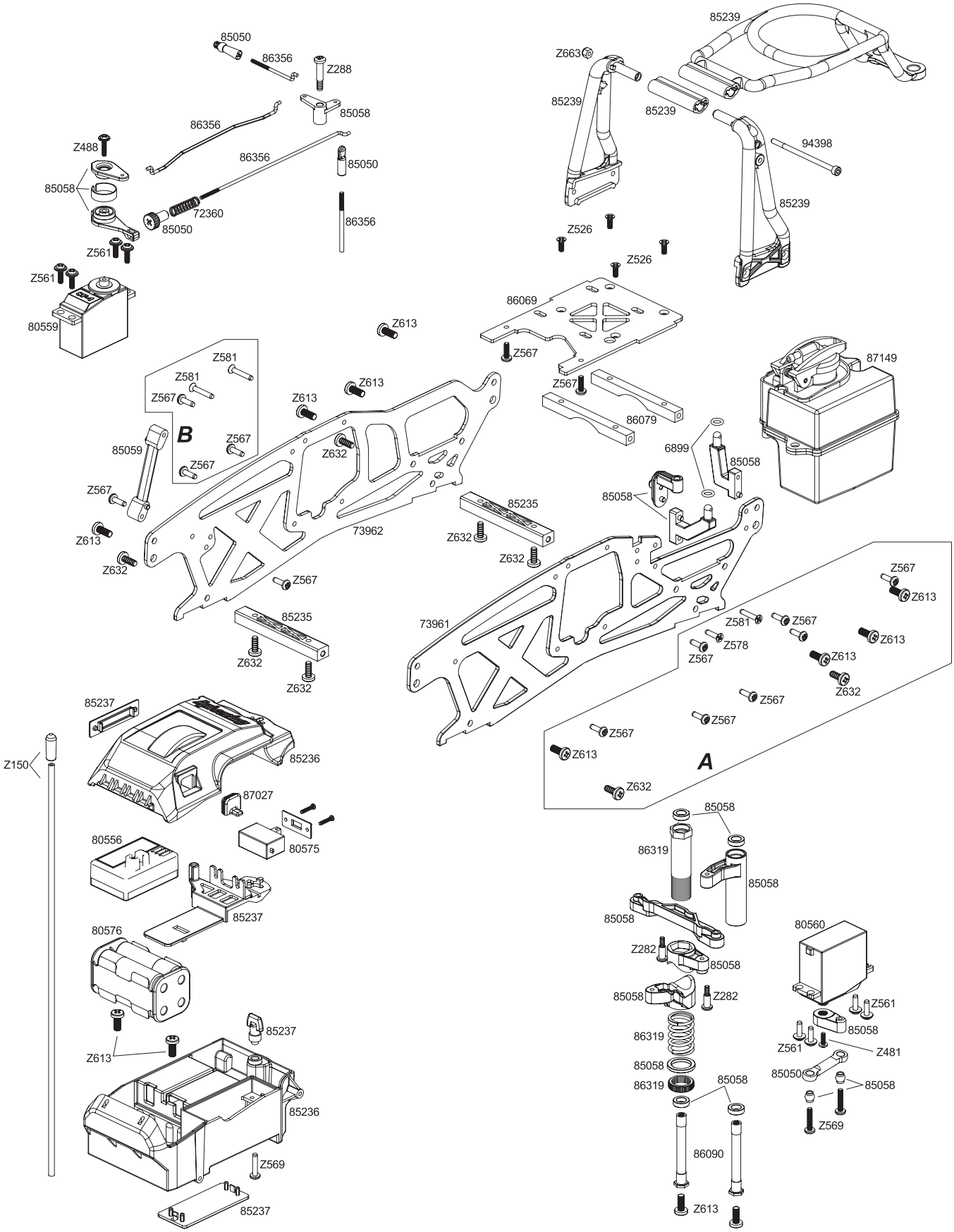
SAVAGE X 4.6 Big Block